TIONG WOON MARINE PTE LTD

-A member of Tiong Woon Corporation Holding Ltd-

Tiong Woon 32

Flat Top Deck Cargo & Ballast Tank Barge

GENERAL PARTICULARS

Flag	:	Singapore
Class	:	ABS
Year Built	:	2008
Notation	:	✠ A1, Barge
Harbourcraft License	:	SC 4342J

PRINCIPAL DIMENSIONS

Length Moulded	:	250 ft (73.18)
Breadth Moulded	:	80 ft (24.38m)
Depth Moulded	:	16 ft (4.88m)
Design Draft	:	3.62m
GRT / NRT	:	2305 / 691
Deck Strength	:	20 Tons/m²
Deadweight	:	Approx. 4,995 Tons
No. of Compartments	:	24 Watertight Compartments
No. of Bulkheads	:	2 Longitudinal & 7 Transverse

SCANTLING

Deck Plating	:	16mm
Bottom Plating	:	12mm
Side Shell Plating	:	14mm

DECK EQUIPMENT

Anchor	:	1 x 1,050kg stockless anchor
Anchor Winch	:	1 set of 10 Tons capacity hand winch c/w one length of 28mm diameter 240 ft galvanized wire rope
Towing Brackets	:	2 Smit type towing pads at bow and aft of the barge
Navigation Light Stands	:	3 units
Stanchions	:	20 port / 20 starboard

STANCHION DETAIL

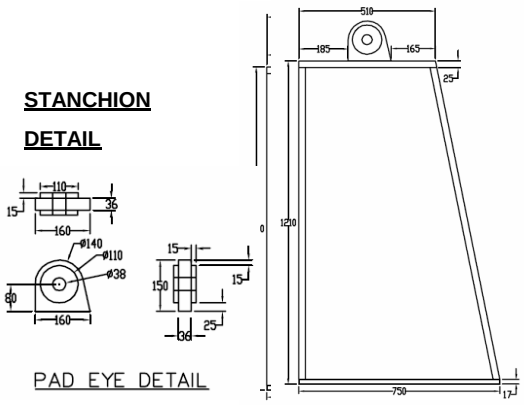

Specifications are believed to be correct but not guaranteed. Updated on 25th February 2014

Tiong Woon Marine Pte Ltd
Co. Reg. No. 198301668R
No 15 Pandan Crescent, Singapore 128470
Tel: (65) 62617888 Fax: (65) 6777 4544

TIONG WOON MARINE PTE LTD

-A member of Tiong Woon Corporation Holding Ltd-

Tiong Woon 32

Flat Top Deck Cargo & Ballast Tank Barge

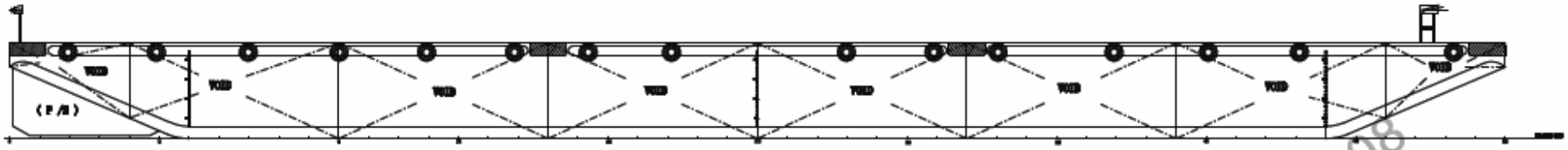

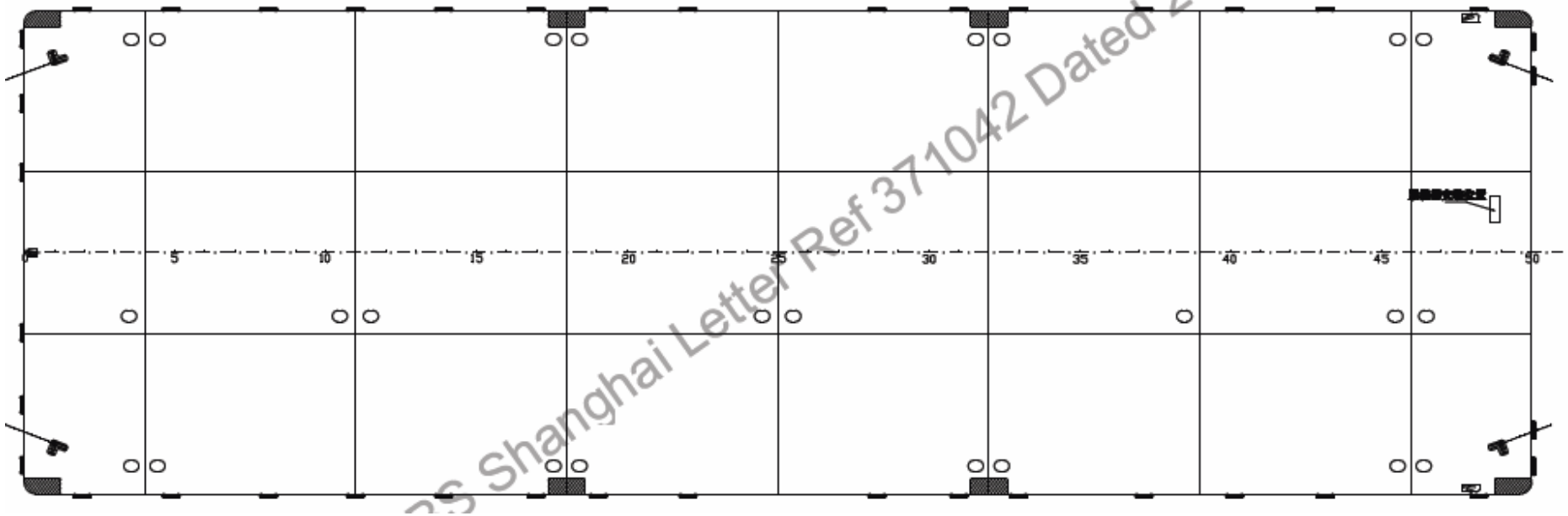

BS Shanghai Letter Ref 371042 Dated 25-AUG-2008